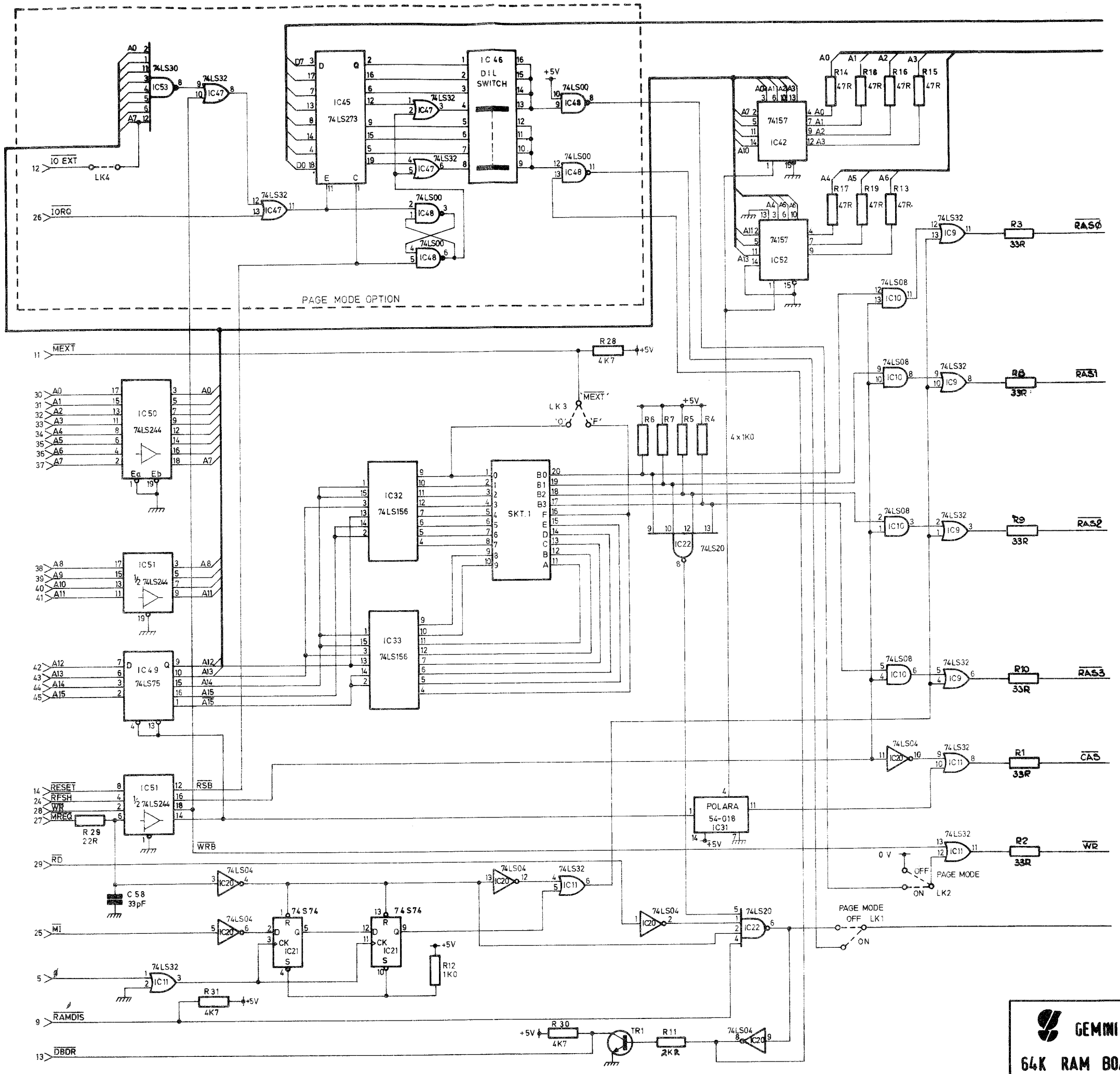
PAGE MODE OPTION
IC45 74LS273
IC46 DIL SWITCH
IC53 74LS30
IC47 74LS32
IC48 74LS00
IC42 74157
IC52 74157
IC50 74LS244
IC51 ½ 74LS244
IC49 74LS75
IC32 74LS156
IC33 74LS156
SKT.1
IC22 74LS20
IC21 74S74
POLARA 54-018 IC31
IC20 74LS04
IC11 74LS32
IC10 74LS08
IC9 74LS32
IO EXT
IORQ
MEXT
RESET
RFSH
WR
MREQ
RD
M1
RAMDIS
DBDR
RSB
WRB
RAS0
RAS1
RAS2
RAS3
CAS
PAGE MODE
OFF
ON
LK1
LK2
LK3
LK4
GEMINI MICROCOMPUTERS
64K RAM BOARD G802 SHT.1/2